Product Data Sheet Characteristics

Susol Molded Case Circuit Breaker

TS1000N

General

Product code	0171006600
Product description	TS1000N NG5 1000A 3P EXP
Trip Unit	NG5(Normal, Without comm.+L/S/I/G, Self-Power, 50Hz)
[In] rated current	1000 A at 40 °C
Poles description	3P
Protected poles description	3T
Neutral position	-
Network type	AC (50/60 Hz)
Upside connection	Front (screw)
Downside connection	Front (screw)

Characteristics

[Ue] rated operational voltage (AC 50/60 Hz)	690 V AC
[Ue] rated operational voltage (DC)	-
[Uimp] rated impulse withstand voltage	8 kV
[Ui] rated insulation voltage	1000 V
Mechanical durability	10000 cycles
Electrical durability (AC)	2000 cycles 690 V In

Electrical durability (DC)	-
Utilisation category	Category B
Suitability for isolation	Yes
Reference standard	IEC 60947-2
[Icu] rated Ultimate short-circuit breaking capacity	55 kA at 220/240 V AC 50/60 Hz, IEC 60947-2
	50 kA at 380/415 V AC 50/60 Hz, IEC 60947-2
	50 kA at 440/460 V AC 50/60 Hz, IEC 60947-2
	40 kA at 480/500 V AC 50/60 Hz, IEC 60947-2
	-
	35 kA at 660/690 V AC 50/60 Hz, IEC 60947-2
	-
	-
[Ics] rated service breaking capacity	55 kA at 220/240 V AC 50/60 Hz, IEC 60947-2
	50 kA at 380/415 V AC 50/60 Hz, IEC 60947-2
	50 kA at 440/460 V AC 50/60 Hz, IEC 60947-2
	40 kA at 480/500 V AC 50/60 Hz, IEC 60947-2
	-
	35 kA at 660/690 V AC 50/60 Hz, IEC 60947-2
	-
	-
[Icm] rated short-circuit marking capacity	121 kA at 220/240 V AC 50/60 Hz, IEC 60947-2
	105 kA at 380/415 V AC 50/60 Hz, IEC 60947-2
	105 kA at 440/460 V AC 50/60 Hz, IEC 60947-2
	88 kA at 480/500 V AC 50/60 Hz, IEC 60947-2
	-
	73.5 kA at 660/690 V AC 50/60 Hz, IEC 60947-2
[Icw] rated short-time withstand current	25 kA at AC 50/60 Hz (1s), IEC 60947-2
	-
	-

LS ELECTRIC

	-
Trip unit characteristics	Electronic
	L : for overload protection (long time)
	S : for short time short-circuit protection
	I : for instantaneous short-circuit protection
	G : for earth fault protection
	-
	-
	-
	-
	Control voltage & frequency : Self-Power, 50Hz)
[Ir] Long-time pick-up adjustment range	Adjustable, 9 settings
	0.8, 0.83, 0.85, 0.88, 0.9, 0.93, 0.95, 0.98, 1 x Iu
[Iu] Long-time pick-up adjustment range	Adjustable, 6 settings
	0.5, 0.6, 0.7, 0.8, 0.9, 1.0 x In
[tr] Long-time delay adjustment range	Adjustable, 9 settings
	0.5s, 1s, 2s, 4s, 8s, 12s, 16s, 20s at 6 x Ir, tolerance ±15% or below 100ms
[Isd] Short-time pick-up adjustment range	Adjustable, 9 settings
	1.5, 2, 3, 4, 5, 6, 8, 10, off x Ir, tolerance ±10%
[tsd] Short-time delay adjustment range	Adjustable, 5 settings
	I^2t on / off mode
	0.05s at 10 x Ir (Tripping time : 20ms < t ≤ 80ms), off mode only
	0.1s at 10 x Ir (Tripping time : 80ms < t ≤ 140ms)
	0.2s at 10 x Ir (Tripping time : 160ms < t ≤ 240ms)
	0.3s at 10 x Ir (Tripping time : 260ms < t ≤ 340ms)
	0.4s at 10 x Ir (Tripping time : 360ms < t ≤ 440ms)
[Ii] Instantaneous pick-up adjustment range	Adjustable, 9 settings
	2, 3, 4, 6, 8, 10, 12, 15, off x In (Tripping time : 50ms ± 10ms)
[Ig] Ground-fault	Adjustable, 9 settings

LS ELECTRIC

protection pick-up adjustment range	0.2, 0.3, 0.4, 0.5, 0.6, 0.7, 0.8, 1, off x In, tolerance: ±10% (Ig>0.4 x In) or ±20% (Ig ≤ 0.4 x In)
[tg] Ground-fault protection time delay adjustment range	Adjustable, 5 settings
	I^2t on / off mode
	0.05s at 1 x Ir (Tripping time : 20ms < t ≤ 80ms), off mode only
	0.1s at 1 x Ir (Tripping time : 80ms < t ≤ 140ms)
	0.2s at 1 x Ir (Tripping time : 160ms < t ≤ 240ms)
	0.3s at 1 x Ir (Tripping time : 260ms < t ≤ 340ms)
	0.4s at 1 x Ir (Tripping time : 360ms < t ≤ 440ms)
Earth leakage pick-up adjustment range	-
	-
Earth leakage alam time delay adjustment range	-
	-
Earth leakage trip time delay adjustment range	-
	-
[Ip] Pre-trip alarm pick-up adjustment range	-
	-
[tp] Pre-trip alarm time delay adjustment range	-
	-
Alarm LED	Ir (90% ~ 105%) : Trun on
	Ir (105% ~) : Blink

Environment

Pollution degree	3, IEC 60664-1
Degree of protection	IP30, IEC 60529
Ambient air temperature for operation	-20…70 °C
Ambient air temperature for storage	-40…70 °C
Mounting mode	Fixed
Mounting support	Backplate

LS ELECTRIC

Approvals[1] (General)	CE (Europe)
	-
	-
	CCC (China)
	EAC (Russia)
	-
Approvals (shipping)	-
	-
	-
	-
	-
	RINA (Italy)
	-

1) LS ELECTRIC's standard products are designed for CE.
To check the product with regional certificates, please contact LSE sales representatives.

LS ELECTRIC

Dimensions

Product	Width	210 mm
	Height	327 mm
	Depth	152.5 mm
	Weight	13 kg
Packing	Width	252 mm
	Height	369 mm
	Depth	213 mm
	Weight	13 kg
	Quantity (in a box)	1 pcs.

TS 1000, 1250, 1600A

Front Type Busbar

[mm]

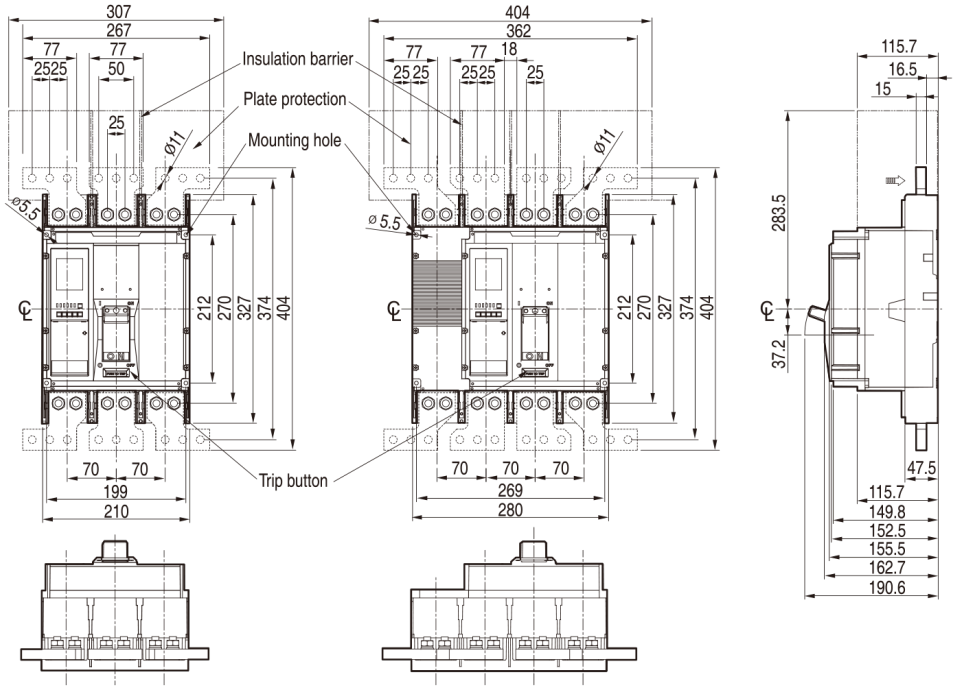

Panel drilling

ON RAILS

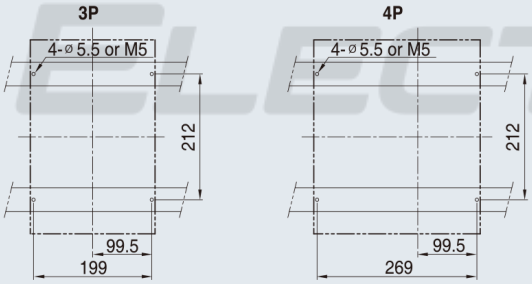
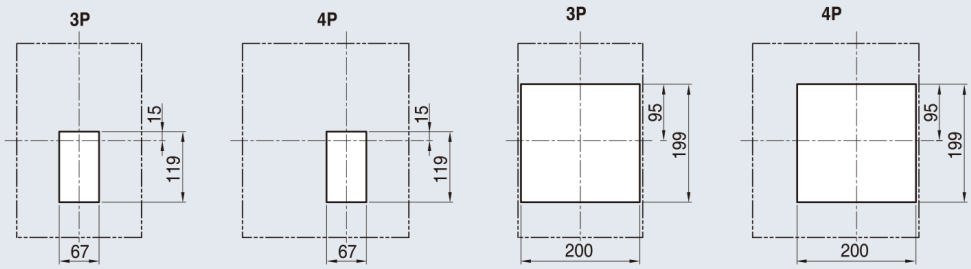
Front panel cutting