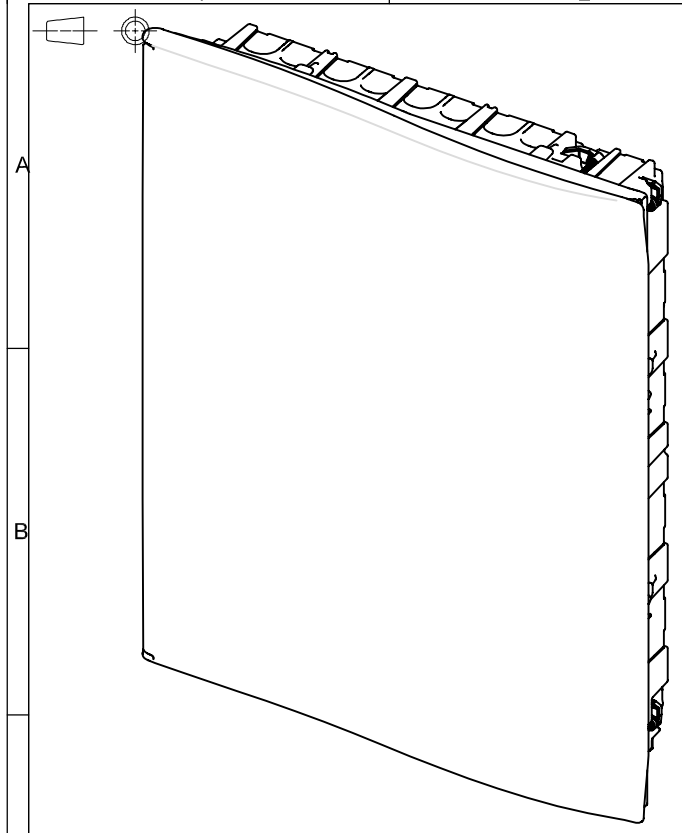

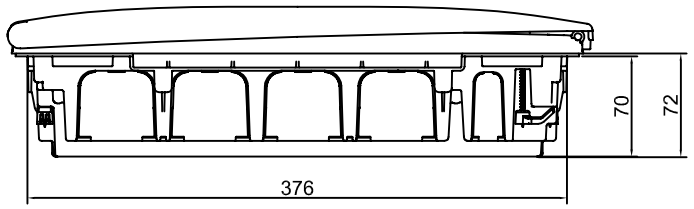

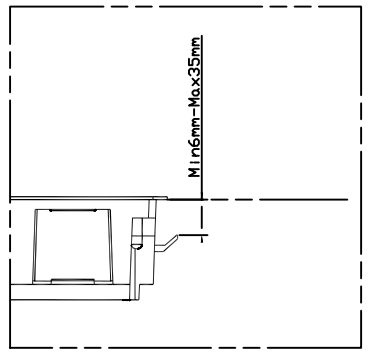

In<125A

TYPE/TIPO	N (mm²)	PE (mm²)
DFF36-/RR	1x(12x(2.5-6mm²)+12x(4-10mm²)+ 1x(10-25mm²)+1x(16-35mm²))	1x(12x(2.5-6mm²)+12x(4-10mm²)+ 1x(10-25mm²)+1x(16-35mm²))
DFF42-/RR	1x(12x(2.5-6mm²)+12x(4-10mm²)+ 1x(10-25mm²)+1x(16-35mm²))	1x(12x(2.5-6mm²)+12x(4-10mm²)+ 1x(10-25mm²)+1x(16-35mm²))
DFF54-/RR	1x(16x(2.5-6mm²)+16x(4-10mm²)+ 2x(10-25mm²)+2x(16-35mm²))	1x(16x(2.5-6mm²)+16x(4-10mm²)+ 2x(10-25mm²)+2x(16-35mm²))
DFF84-/RR	2x(12x(2.5-6mm²)+12x(4-10mm²)+ 1x(10-25mm²)+1x(16-35mm²))	2x(12x(2.5-6mm²)+12x(4-10mm²)+ 1x(10-25mm²)+1x(16-35mm²))

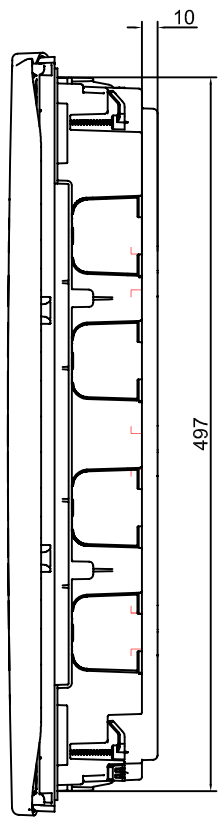

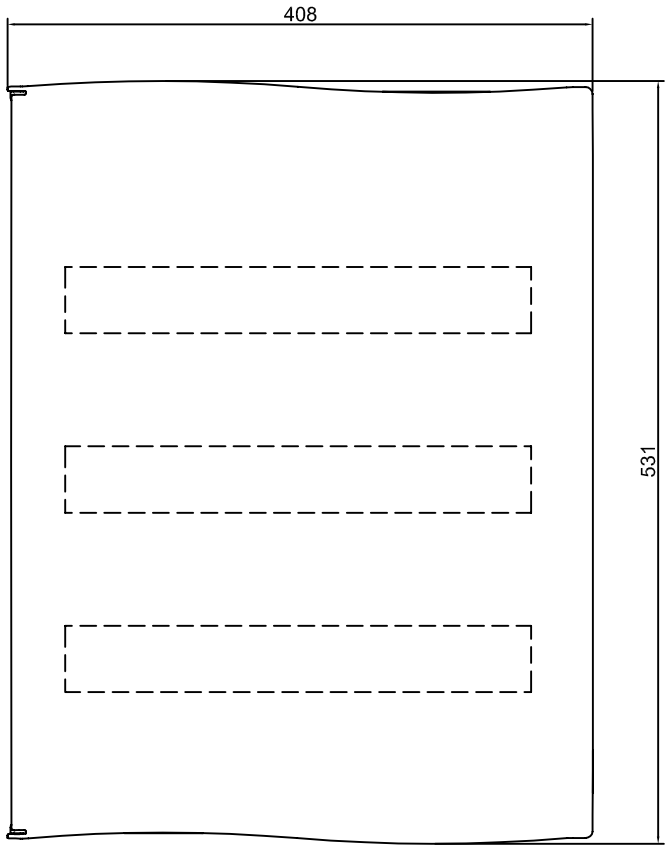

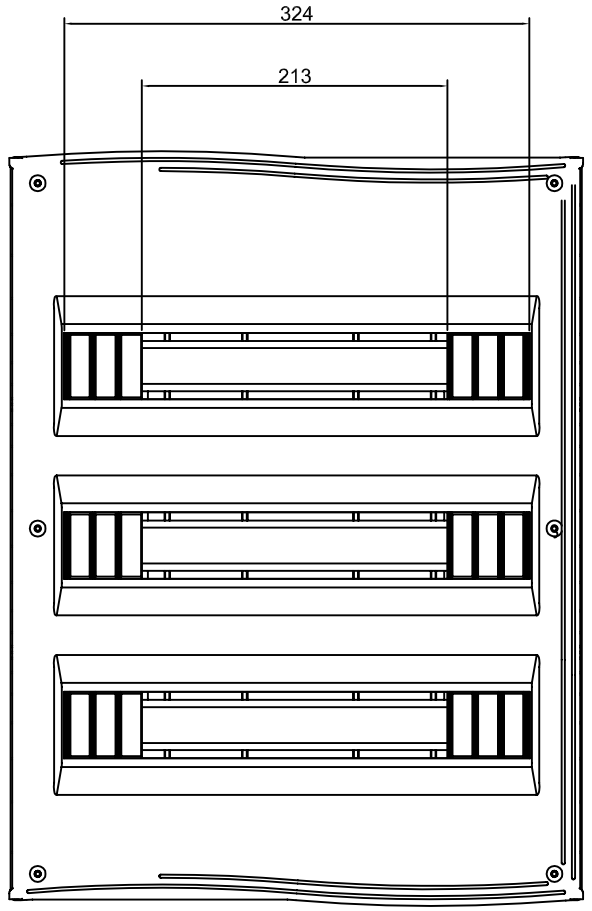

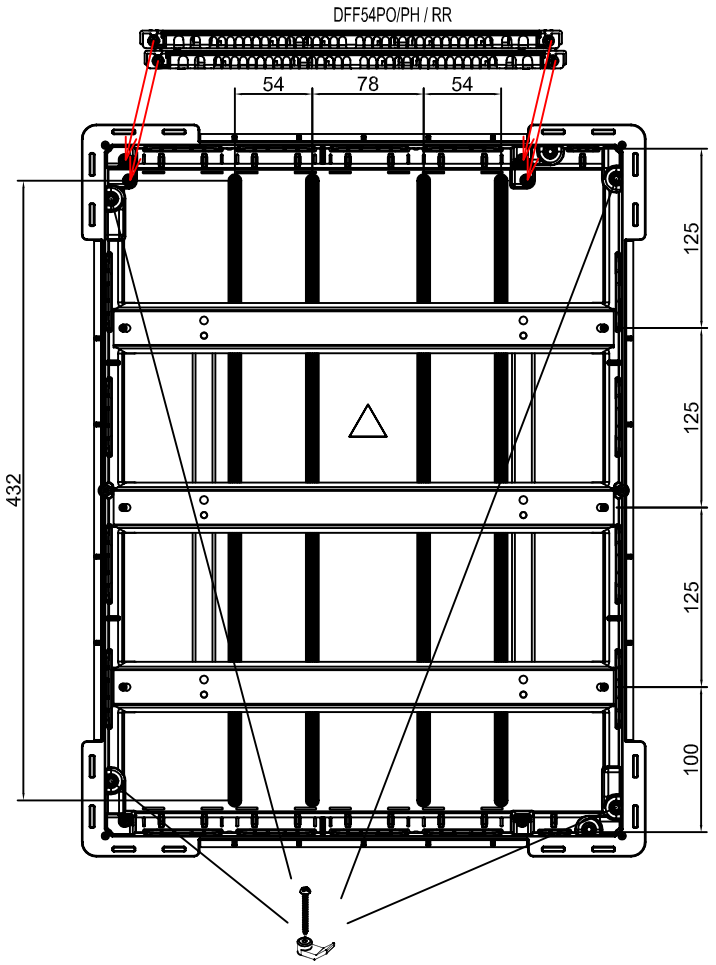

MODIFICADO MODIFIED				
FIRMA / SIGNATURE DIGITAL	NOMBRE NAME	FECHA DATE	Nº EDIC. MODIF.	DESCRIPCION DEL CAMBIO/ CHANGE DESCRIPTION
APROBADO CHECKED	C.VICENTE	20/11/2018	DESCRIPCION / DESCRIPTION	PROYECTO/PROJECT
DIBUJADO DRAWN	J.MADRID	20/11/2018	DFF54PO/PH - DFF54PO/PH/RR	DIAMANT
				SUSTITUYE/ REPLACE
HOJA 1 DE 1/ SHEET 1 OF 1	TOLERANCIAS GENERALES GENERAL TOLERANCES		CODIGO DE PLANO / DRAWING CODE	
TAMAÑO / SIZE A2	ESCALA / SCALE 1:1	EN 22768-mK	160.06.006	EDICION / EDITION Nº 1

www.ide.es

Queda terminantemente prohibida la reproducción o divulgación, total o parcial, de este plano sin previa autorización por escrito de IDE Electric SL
Total or partial reproduction or disclosure of this document is strictly forbidden without the prior written aproval of IDE Electric SL